PDG300

DÖNER KEBAB MACHINE

GAS WITH BOTTOM MOTOR AND CERAN GLASS



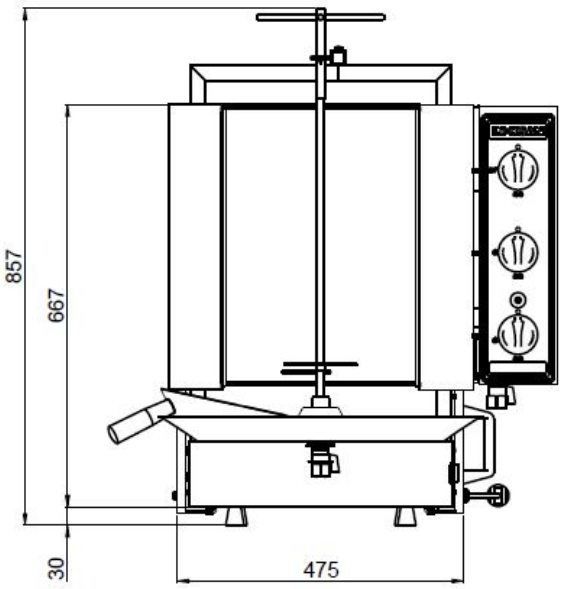

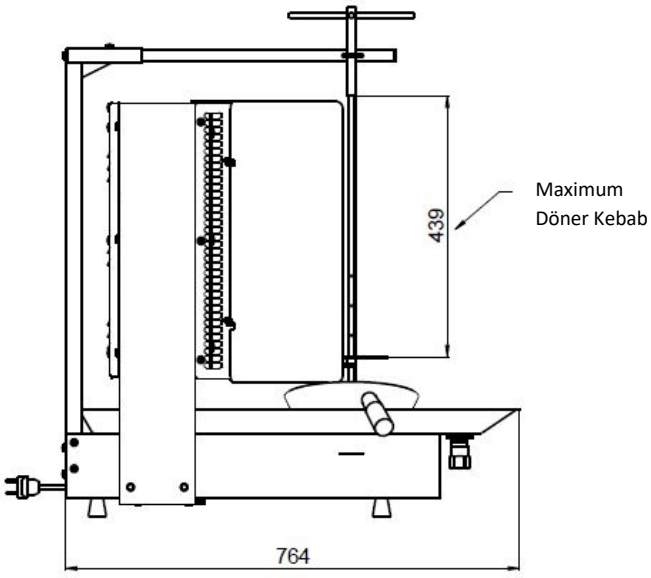

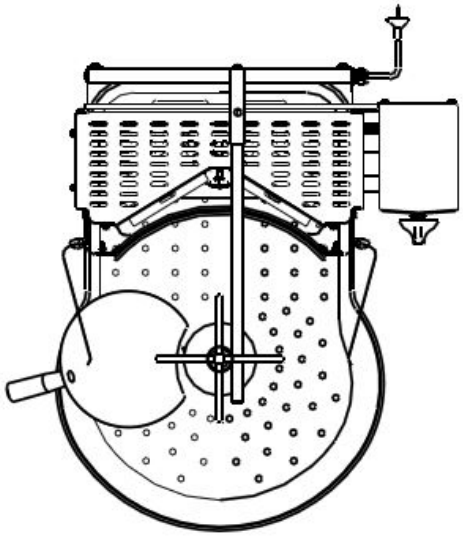

Organize Sanayi Bölgesi Eflatun CD. No:5 16159 Nilüfer/BURSA inoksan@inoksan.com.tr T. +90 224 294 74 74 - F. +90 224 243 61 23

GENERAL FEATURES

* Option of rotating the skewer to the left or right,
* Knob will operate main radiant with full flame in position 1, main and auxiliary radiants with full flame in position 2 and both radiants in half flame in position 3..
* All outer surfaces except the ones in contact with meat made of AISI 430 SB steel.
* Rotary skewers capable of operating in inclined position.
* Capable of operating under different gas pressures.
* Shovel included in the equipment.
* Oil leakage into the motor prevented by coating designed specially.
* Rotating the skewer manually in case of power failure ,
* Possibility of movable top body,
* Adjustable feet,,
* Independent control of the motor from the equipment,

TECHNICAL SPECIFICATIONS

Total Gas Power	12	Kw
Gas Inlet	1/2	Inc
Gas Pressure	20	mbar
Capacity of Doner Kebab Machine	45-60	Kg
Motor Power Inlet	220-230V AC 50-60Hz	V - Hz.
Motor Power	6	Ad.
Net Weight	45	Kg
Skewer Length	439	mm

Organize Sanayi Bölgesi Eflatun CD. No:5 16159 Nilüfer/BURSA inoksan@inoksan.com.tr T. +90 224 294 74 74 - F. +90 224 243 61 23